Newsletter

BPO
we know how

April 2023
volume 30, number 1

In this issue: Pushing technology boundaries | We know how: Solving challenges in injection moulding products | BPO visits 3D printing expert!

Pushing technology boundaries

BPO has successfully solved many technically challenging design puzzles throughout the years. Recently we received another very complex design request from Craemer GmbH. In the development of the new hygiene pallet box, many contradictory requirements needed to be united in one design.

The full development was performed, from the first design brief to a detailed product with all required production details. Craemer and BPO went through a structured process, which started with the major challenges. An idea exploration was done, followed by the combination of the most promising ideas in different concept designs, each with its own unique combination of solutions.

Detail pallet box

After one concept was selected for further development, the design was detailed step by step, while adding more detail each time and resolving smaller challenges. According to our usual practise, simulations were used to validate and optimise the performance of the box.

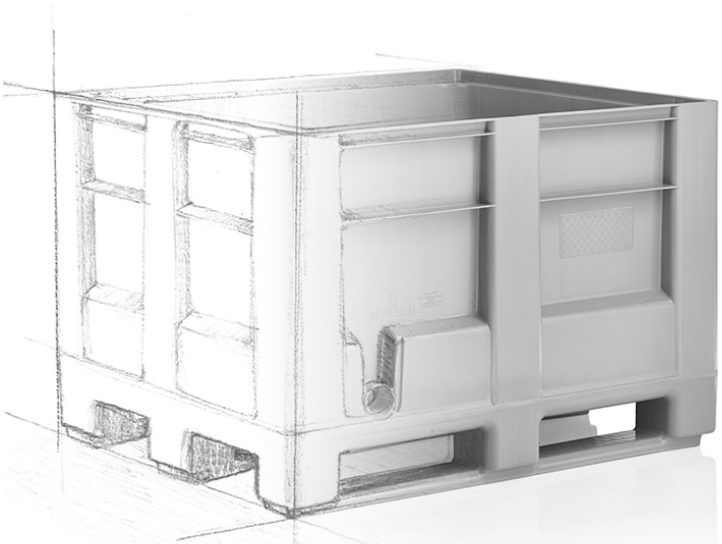

Design process from sketch to final product

The final configuration on these elements has been developed in an iterative process between the 3D design and simulation results.

With this new box, Craemer's manufacturing is pushing the limits of technology. This was only possible with the BPO team and its experience and approach in resolving technical challenges.

Detail of weld seam geometry

The result is the new hygiene box HB3: The first and only completely closed pallet box on the market. It consists of two one-piece injection moulded elements: The first is the top part, or the box body, and the pallet with three welded runners is the bottom and second part. Another special feature is a patented weld seam geometry for joining both plastic elements, which ensures maximum impact resistance and break strength. The weld seam is contour-milled and therefore almost invisible.

For the inner structure, various options were considered. In the end, there was an optimal balance achieved between hygiene, manufacturability, and structure. A combination of a waffle structure, (optional) enclosed steel profiles and hollow structures was chosen to meet the strength and stiffness requirements.

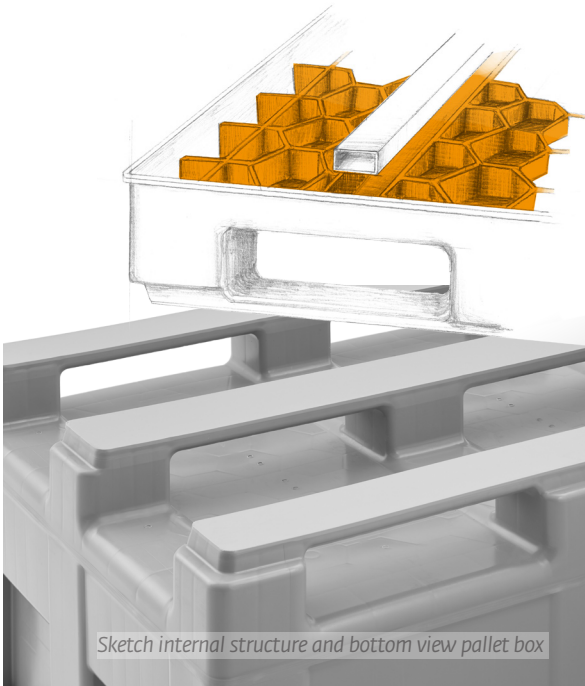

Sketch internal structure and bottom view pallet box

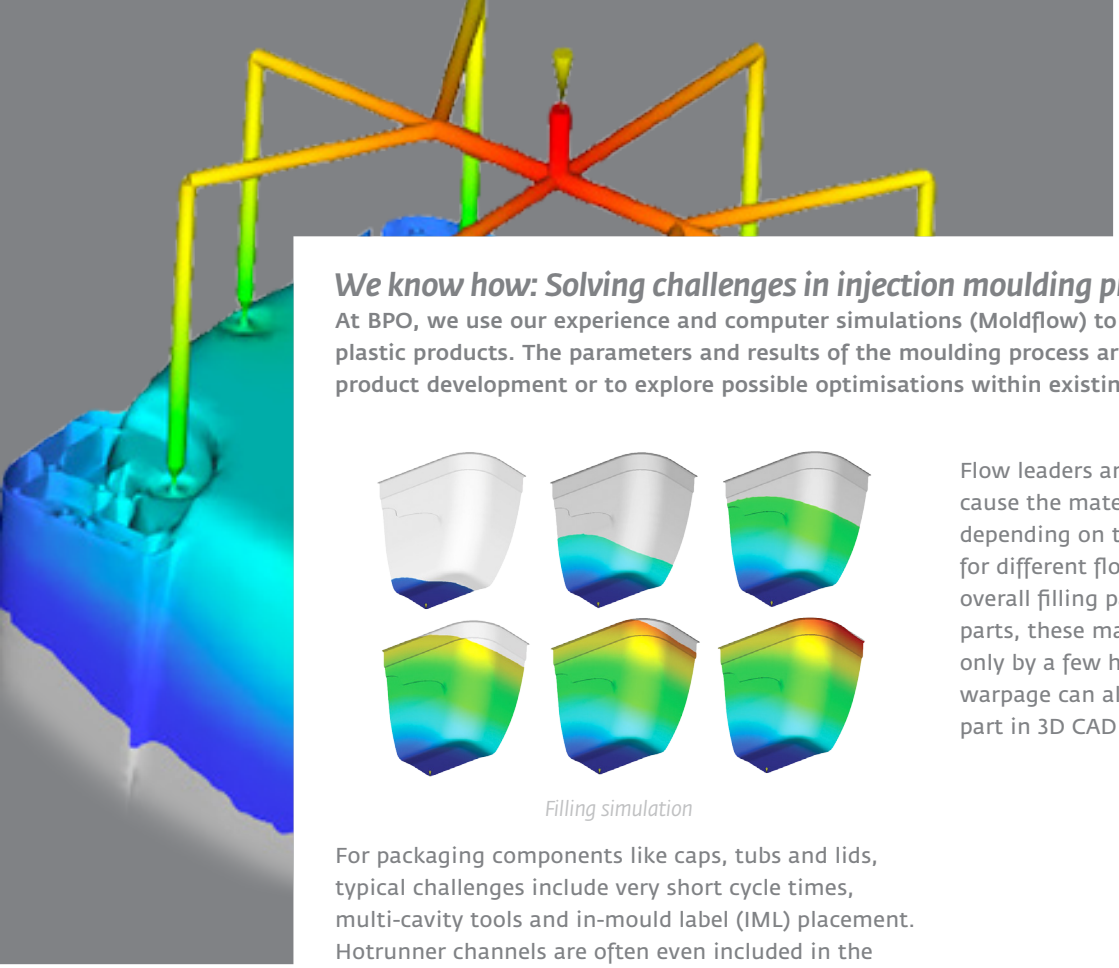

BPO
we know how

We know how: Solving challenges in injection moulding products

At BPO, we use our experience and computer simulations (Moldflow) to solve injection moulding challenges in plastic products. The parameters and results of the moulding process are optimised virtually, as an input for product development or to explore possible optimisations within existing tooling.

Filling simulation

For packaging components like caps, tubs and lids, typical challenges include very short cycle times, multi-cavity tools and in-mould label (IML) placement. Hotrunner channels are often even included in the simulations to get detailed results.

Besides that, deformation due to anisotropic shrinkage (warpage) often is an important aspect that is analysed. The warpage can be minimised by optimising the filling pattern. This can be done by fine-tuning the parameters or introducing flow leaders.

Flow leaders are variations in material thickness that cause the material to flow with a different speed, depending on the local thickness. This can compensate for different flow lengths within a part and unbalanced overall filling patterns. For thin-walled packaging parts, these material thickness deviations may vary only by a few hundreds of millimetres. Ultimately, warpage can also be compensated by pre-bending the part in 3D CAD in the opposite direction.

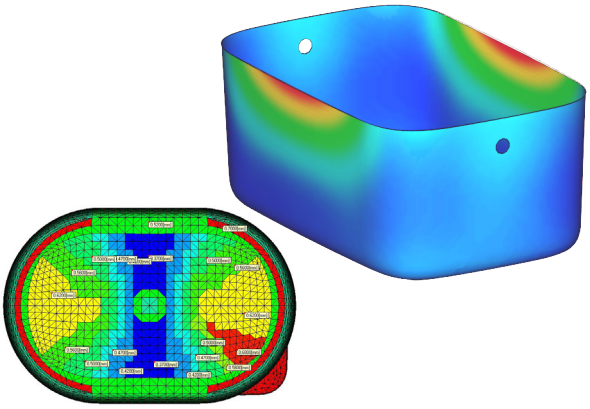

Flow leader design and warpage result

For larger plastic parts, the number and location of injection points are typically optimised. The main goal is to ensure a balanced filling pattern below the maximum clamping force of the available machine.

Many of BPO's customers manufacture, sell or use injection moulded plastic products. BPO has been supporting them with their injection moulding challenges for many years.

BPO Nederland b.v.
Scheepmakerij 11
2628 AA Delft
the Netherlands
+31 (0) 15 362 0000
info@bpo.nl
www.bpo.nl

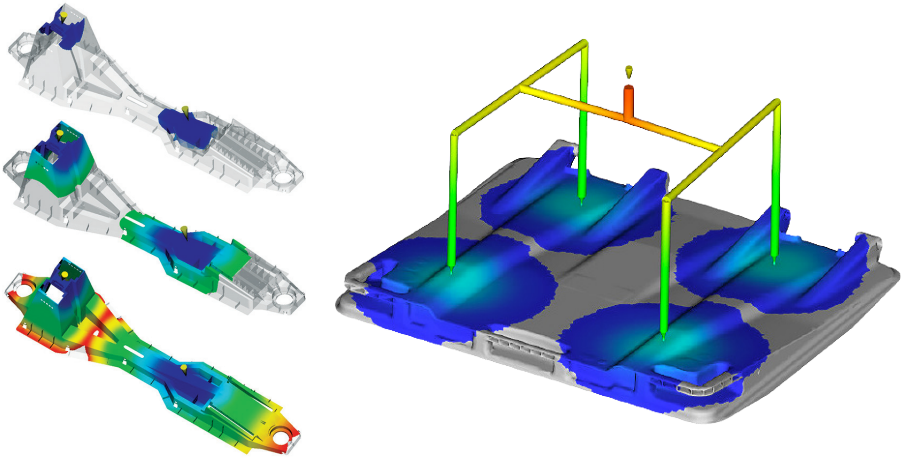

Examples of large parts with multiple injection points

BPO visits 3D printing expert!

Last month, our team visited 3D-printing company Materialise in Belgium to gain the latest knowledge in this field! Although we have two 3D-printers at our office, we often need a more sophisticated solution for prototyping during our development process.

Materialise offers a great variety in options for printing when it comes to techniques, materials, dimensions, and functionality. By verifying a design for industrial production with a functional and high-quality 3D printed prototype, it can be optimised and unnecessary adjustment costs in the later process can be prevented.

At BPO, we can advise our clients about the use of 3D-printing in product development, feasibility studies and cost reductions.